Journal of System Design and Dynamics

Vol. 1, No. 3, 2007

Modeling of Electromagnetic Damper for Automobile Suspension*

Yasuhiro KAWAMOTO**, Yoshihiro SUDA***, Hirofumi INOUE**** and Takuhiro KONDO*****

**Department of Engineering Synthesis, The University of Tokyo,
4-6-1, Komaba, Meguro, Tokyo, 153-8505, Japan
E-mail: kawamoto@iis.u-tokyo.ac.jp

***Center for Collaborative Research, The University of Tokyo,
4-6-1, Komaba, Meguro, Tokyo, 153-8505, Japan
E-mail: suda@iis.u-tokyo.ac.jp

****Chassis System Development Div., Toyota Motor Corporation,
1, Toyota-cho, Toyota, Aichi, 471-8572, Japan
E-mail: hirofumi@inoue.tec.toyota.co.jp

*****New Products Development Dept., KYB Corporation,
2548, Dota, Kani-shi, Gifu, 509-0298, Japan
E-mail: kondou-taku@kyb.co.jp

Abstract

In this paper, the modeling of the electromagnetic damper (EMD) for automobile suspension is presented and the validation of the model is demonstrated by comparing the numerical results with the experimental results obtained using shaker tests. EMD is used as an active suspension and controlled to have output force calculated from velocities of sprung and unsprung masses. The formulation of EMD system for active suspensions is first developed, and the validation of the EMD model is demonstrated by experiments of the EMD for automobile suspensions. The validity of the formulation of the EMD developed in this investigation is shown for the frequency responses as well as energy balance for its active use.

Key words: Electromagnetic Actuator, Damping, Suspension, Vibration Control, Automobile

1. Introduction

For many years, active controls of automobile suspensions have been studied for improving ride comfort and compatibility between the vehicle stability and the vibration isolation. For this problem, the authors have been proposing an electromagnetic damper system for automobiles [3, 5]. Electromagnetic damper (EMD) consists of DC motor and the ball screw mechanism. It converts linear motion of vibration into input torque for DC motor. EMD uses electromagnetic force as the damping force and, therefore, the damping force can be electrically controlled by regulating the induced current. The proposed damper has the following three important characteristics: 1) High controllability that can be achieved by the tunable damping force, 2) Active suspension, and 3) Energy regeneration [1, 2, 4, 6].

In the past studies of EMD for automobiles [3, 5, 7], the proposed damper has been used as passive suspensions. In the passive use, EMD has almost linear damping characteristics, and this was demonstrated in the experiments by shaker. However, in this paper, EMD is used as an active suspension and controlled to have output force calculated from velocities

*Received 9 Feb., 2007 (No. 07-0084)
[DOI: 10.1299/jsdd.1.524]

of sprung and unsprung masses.

In order to formulate EMD system for active suspensions, the EMD model is developed as an electro-mechanical system as shown in Fig. 1. The electromagnetic suspension system is used in a quarter-car model, which has parameters of a passenger car. Moreover, the formulation is validated by experiments for an automobile suspension equipped with EMD.

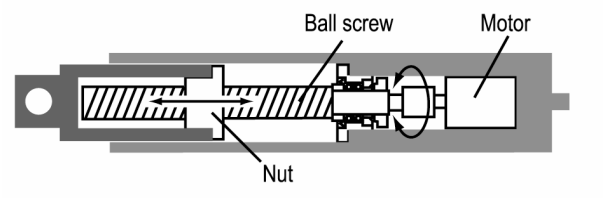

Fig. 1 Concept of electromagnetic damper

2. Modeling of Electromagnetic Suspension System

The modeling of the electromagnetic damper (EMD) is developed as an electro-mechanical system. The inductance of the circuit and the mass of EMD are considered, while these effects were not considered in the previous studies [(1) - (3)].

2.1 Electromagnetic Damper

In this section, the electromagnetic damper (EMD) is formulated in the mechanical and electrical equations.

2.1.1 Output Force of Electromagnetic Damper.

The output force of the electromagnetic damper is formulated using equations of rotary motion. A rotary motion of the electromagnetic damper can be described by 1) axial to rotary transformation of a ball screw and 2) rotor dynamics of motor and ball screw. Rotor dynamics model is shown in Fig. 2, and the parameters are presented in Table 1. Ball screw transforms an axial stroke input into rotary motion, and then rotary inertias of motor and ball screw rotate dynamically.

Following items are assumed in the following modeling procedure.

- Motor rotor and ball screw are assumed to be rigid.
- Backlash and torsion of ball screw are not considered.

That is, in the transformation of ball screw, the following equation is supposed to be true:

$$\omega = \frac{2\pi}{l}\dot{z} \tag{1}$$

where ω = angular velocity, and $\dot{z}$ = input stroke speed.

The equation of the rotor dynamics is described as follows:

$$(J_m + J_b)\dot{\omega} = \tau_m - \tau_d \tag{2}$$

where τ_m = output torque of motor, and τ_d = total output torque. The output torque is proportional to the motor current, i, which leads to the following equation:

$$\tau_m = k_t i \tag{3}$$

Using the equilibrium of force, the output force in the axial direction, f_d, is written as

$$f_d = \frac{2\pi}{l}\tau_d \tag{4}$$

Consequently, using Eqs. 1 to 4, the output force of the electromagnetic damper is obtained as follows:

$$f_d = \Phi i - I_d \ddot{z} \tag{5}$$

where

$$\Phi = \frac{2\pi}{l}k_t \tag{6}$$

$$I_d = \left(\frac{2\pi}{l}\right)^2 \left(J_m + J_b\right) \tag{7}$$

For the application to automobile suspensions, an inertial term in Eq. 5 is so important that an equivalent inertia, I_d, cannot be ignored as compared to the unsprung mass [(7)]. In practice, the mechanical friction of EMD is larger than that of a conventional oil damper. The output force, f_d, is considered as follows:

$$f_d = \Phi i - I_d \ddot{z} - f_r \operatorname{sgn}(\dot{z}) \tag{8}$$

where f_r = dynamic friction. Equation 8 is used as the EMD output force in simulation.

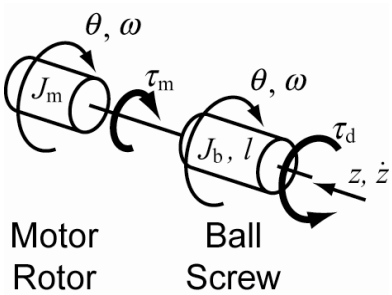

Fig. 2 Rotor dynamics model of electromagnetic damper.

Table 1 Parameters of rotor dynamics model.

Symbol	Description
ω	Angular velocity
$\dot{z}$	Stroke speed
J_m	Moment of inertia of motor rotor
J_b	Moment of inertia of ball screw
l	Lead of the ball screw
I_d	Equivalent inertial inertia
k_t	Torque constant
Φ	Motor constant

2.1.2 Circuit Equation of Motor.

The motor circuit of EMD is modeled as the equivalent DC motor circuit. The motor circuit connected to a power supply is shown in Fig. 3. Parameters of circuit model are presented in Table 2. Since electromotive force is proportional to the angular velocity and stroke speed (Eq. 1), it is obtained as $\Phi\dot{z}$ and written as follows:

$$k_e\omega = k_e \frac{2\pi}{l}\dot{z} = \Phi\dot{z} \tag{9}$$

Thus, the circuit equation is written as follows:

$$v = L\frac{di}{dt} + Ri + \Phi\dot{z} \tag{10}$$

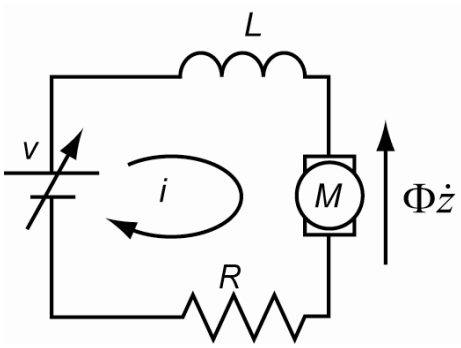

Fig. 3 Circuit Diagram of Motor.

Table 2 Parameters of circuit model.

Symbol	Description
i	Current
V	Variable Voltage of Power Supply
L	Inductance
R	Resistance
k_e	Induced Voltage Constant (= k_t)

2.2 Electromagnetic Suspension System

In this section, the electromagnetic suspension (EMS) system is modeled in a quarter-car model and its control system is discussed.

2.2.1 Quarter-Car Suspension Model.

EMS consists of an EMD and a coil spring. Though the EMD independently works as an actuator, supporting vehicle body by EMD only requires so much energy and, therefore, EMS system has a coil spring.

In this subsection, EMS is illustrated as a quarter-car model as shown in Fig. 4. In order to identify the effect of an equivalent inertial inertia, I_d, and heavier weight of EMD due to a mechanical damper, a suspension mount and mass of a component of EMD, m_r, are considered. Equations of 3 DOF quarter-car model are written as follows:

$$m_s\ddot{x}_s + k_2(x_s - x_u) + k_3(x_s - x_r) + c_3(\dot{x}_s - \dot{x}_r) = 0 \tag{11}$$

$$m_r\ddot{x}_r - k_3(x_s - x_r) - c_3(\dot{x}_s - \dot{x}_r) = f_d \tag{12}$$

$$m_u\ddot{x}_u - k_2(x_s - x_u) + k_1(x_u - x_0) = -f_d \tag{13}$$

where

$$f_d = u - I_d\ddot{z} - f_r\,\mathrm{sgn}(\dot{z}) \tag{14}$$

$$u = \Phi i \tag{15}$$

$$z = x_r - x_u \tag{16}$$

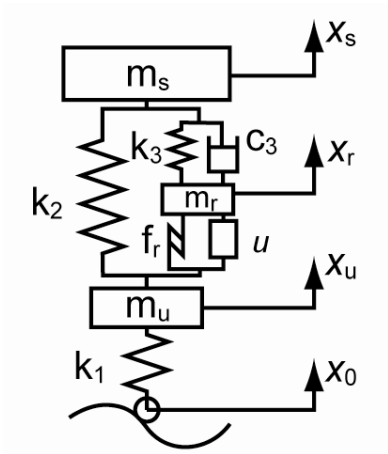

Fig. 4 3 DOF quarter-car model.

Table 3 Parameters of 3DOF quarter-car model.

Symbol	Description
m_s	Sprung Mass
m_r	Mass of rod (a component of EMD)
m_u	Unsprung mass
I_d	Equivalent inertial inertia
k_1	Spring constant of tire
k_2	Spring constant of suspension
k_3	Spring constant of mount
c_3	Damping coefficient of mount
f_r	Coefficient of dynamic friction
x_s	Displacement of sprung mass
x_r	Displacement of rod
x_u	Displacement of unsprung mass
x_0	Displacement of road profile

2.2.2 Control System

The current of motor in the EMS system is controlled to follow the required output force, u_{ref}, by PI controller as shown in Fig. 5. The required output force, a reference signal for control output, is calculated using the following equation:

$$u_{ref} = -C_s\dot{x}_s - C_g\dot{x}_u \tag{17}$$

where C_s and C_g are feedback gains of velocity of sprung mass and unsprung mass, respectively. $C_s > 0$ and $C_g \le 0$ are required to stabilize the EMS system. The positive feedback gain of sprung mass velocity means the skyhook damper for isolation, and the negative feedback gain of unsprung mass means the ground-hook damper for road holding. The voltage of power supply, v, is defined by PI controller as follows:

$$\mathcal{L}\{v\} = (K_p + \frac{K_I}{s})\mathcal{L}\{i_{ref} - i\} \tag{18}$$

where $\mathcal{L}$ is Laplace transform, and s Laplacian operator. PI gains are tuned for EMS system to control the resonance mode of unsprung mass.

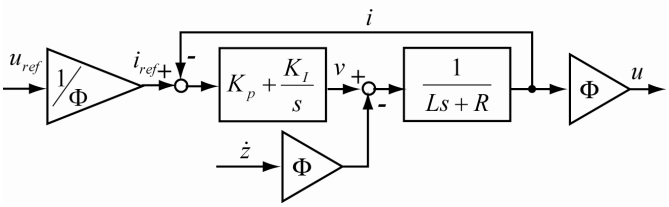

Fig. 5 Block diagram of PI controller.

3. Energy Consumption of EMS System

Energy consumption of EMS is introduced in order to validate the modeling of EMS and evaluate the capability for regenerating energy of EMS.

3.1 Energy Consumption

Energy, consumed or absorbed by EMD, is equal to that of the power supply in EMS system on the condition that the loss of power conversion is ignored. The power of the power supply, ε, is obtained as a product of the current of motor circuit, i, and the voltage of power supply, v. On the other hand, ε can be written with respect to the output force, u, and stroke speed, $\dot{z}$ when the motor circuit inductance is supposed to be ignored. This leads to

$$\varepsilon = iv = \frac{u^2}{C_{eq}} + u\dot{z} \tag{19}$$

where

$$C_{eq} = \frac{\Phi^2}{R} \tag{20}$$

ε is decomposed into the consumption and regeneration terms on the assumption as follows:

- Control input is equal to reference signal: $u = u_{ref}$.
- The velocity of mass of rod is almost equal to that of sprung mass: $\dot{x}_r \approx \dot{x}_s$, then the stroke speed of suspension is obtained as $\dot{z} \approx \dot{x}_s - \dot{x}_u$.

Using the above assumptions and Eq. 17, the control input is written as follows:

$$u = -\left(C_s + C_g\right)\dot{x}_s + C_g\dot{z} \tag{21}$$

Substituting the above expression to Eq. 19, the energy consumption of the power supply, ε, is obtained as follows:

$$\varepsilon = \frac{\left(C_s + C_g\right)^2}{C_{eq}} \dot{x}_s^2 - \frac{\left(C_s + C_g\right)}{C_{eq}} \left(2C_g + C_{eq}\right) \dot{x}_s \dot{z} + \frac{C_g}{C_{eq}} \left(C_g + C_{eq}\right) \dot{z}^2 \tag{22}$$

The first term, which is proportional to the square of the velocity of sprung mass, can be taken as the consumed energy for reducing the vibration of the sprung mass. The sign condition of the second term depends on both gain setting and the phase relation between the sprung mass velocity and the stroke speed. The third term is the regenerative energy, because the feedback gain of the unsprung mass velocity should be defined in the range as $-C_{eq} \le C_g < 0$ for the system stability.

3.1.1 Effect of Unsprung Mass Velocity Feedback Gain on Energy Consumption.

The regenerative capability of EMS system mainly depends on the third term of Eq.22, and moreover has the influence of the unsprung mass velocity feedback gain.

For example, when the unsprung mass velocity feedback gain is equal to zero, $C_g = 0$, in which condition the suspension control is equivalent to the skyhook damper and the third regenerative term of Eq. 22 becomes zero. That is why the skyhook control is disadvantageous from the energy consumption standpoint. In addition, it is difficult for the skyhook control to improve the property of the unsprung mass because of zero control input to the dynamics of the unsprung mass.

Calculating the unsprung mass velocity feedback gain that minimizes the third regenerative term in Eq.22, the following equation is obtained:

$$C_g = -\frac{C_{eq}}{2} \tag{23}$$

3.2 Feedback Gain Setting for Experiment

For experiments discussed in the next chapter, the value of the sprung mass velocity feedback gain is defined to obtain sufficient damping characteristics. The unsprung mass velocity feedback gain is derived in 3.1.1 as $-0.5C_{eq}$ in order to reduce the energy consumption of EMS system.

The sprung and unsprung mass velocity feedback gains are represented in damping ratio expression as ζ_s = 1.5 and ζ_g = 0.45, respectively. The sprung mass velocity feedback gain is decided in order to demonstrate that the EMD is capable of fully damping the resonance of sprung mass. This capability leads to the control of the attitude variation.

4. Vibration Tests

Using an actual EMD, the validation of the EMS model is discussed using vibration tests.

4.1 Experimental System

The experimental system that includes EMS system is shown in Fig. 6. A shaker controlled by a PC can vibrate the quarter-car model that has a specification almost equal to a passenger car. A digital signal processor (DSP) operates the control and measurement. DSP calculates a required force of EMD with sensor signals and outputs a reference signal

to a motor driver. The drive voltage is then applied to an EMD motor. Furthermore, energy can flow in the not only discharge but also charge directions.

A developed actual EMD for experiments is shown in Fig. 7. A ball screw system used for this damper is a commercially available one. In order to realize smooth stroke motion, a long-lead ball screw, 16 mm, is adopt.

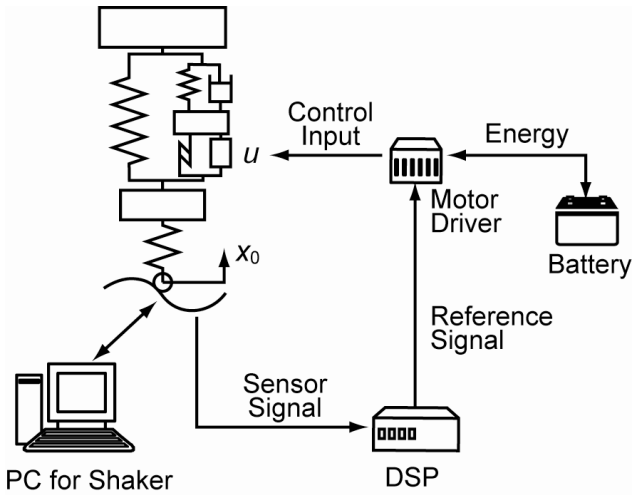

Fig. 6 Schematic diagram of experimental system.

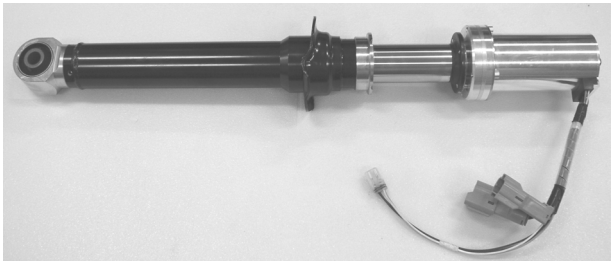

Fig. 7 Electromagnetic damper/actuator for automobiles

4.2 Road Elevation Profile

PSD of a road elevation profile for the evaluation of EMS is shown in Fig. 8. The road profile with random roughness is generated equivalent to C level on ISO standard. A vehicle is assumed to travel at 80 km/h on this road. In the next section, road profile is used as an input to EMS system, and for the spectrum analysis.

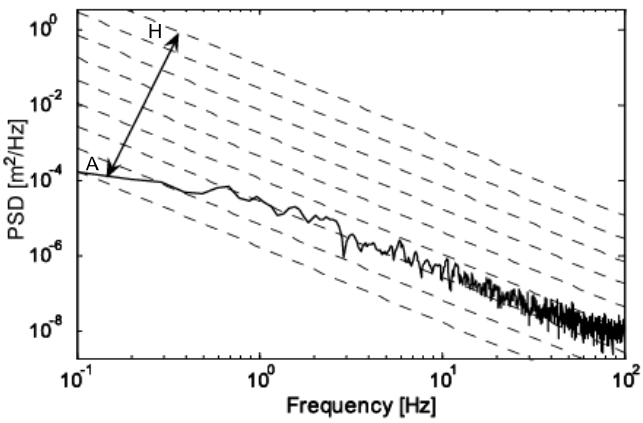

Fig. 8 Elevation PSD of road input to a vehicle traveling at 80km/h on the road equivalent to ISO C level.

4.3 Experimental Results

In comparison with simulation results, experimental results are described from four viewpoints: 1) EMD output performance as an actuator, 2) Frequency response functions (FRF) of the quarter-car model, 3) FRF of EMD output and 4) Frequency characteristics of energy balance between consumption and regeneration.

4.3.1 EMD Output Force.

As an example of experimental results, a Lissajous figure of stroke velocity to EMD output is shown in Fig. 9. An excitation input is a 25 mm amplitude sine wave at 1.2 Hz. It is found that the experimental result is in good agreement with the value of simulation. At 0 m/s of stroke velocity, the effect of friction is found in both results.

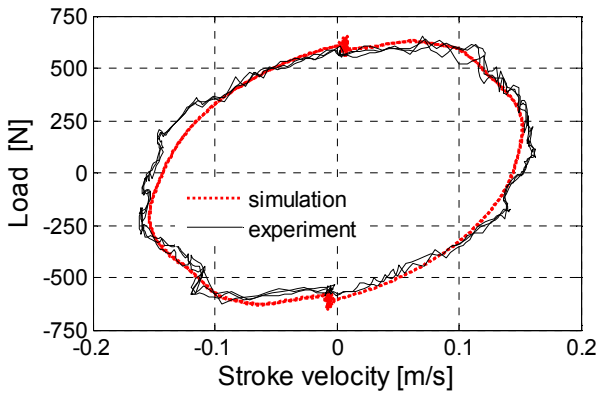

Fig. 9 Lissajous figure of stroke velocity to load (ζ_s, ζ_g) = (1.5, 0.45).

4.3.2 Frequency Response Functions of Quarter-Car Model

With a road input of ISO C level, FRFs of sprung mass acceleration and tire deflection are calculated in terms of isolation of sprung mass, ride comfort and road holding ability, respectably. The FRF of sprung mass acceleration is shown in Fig. 10, and that of tire deflection shown in Fig. 11. In both figures, results of passive suspension system are shown as well. The simulation results are in good agreement with experimental results up to the resonance frequency of unsprung mass. In addition, it is demonstrated that EMD is capable of fully damping the resonance mode of sprung mass.

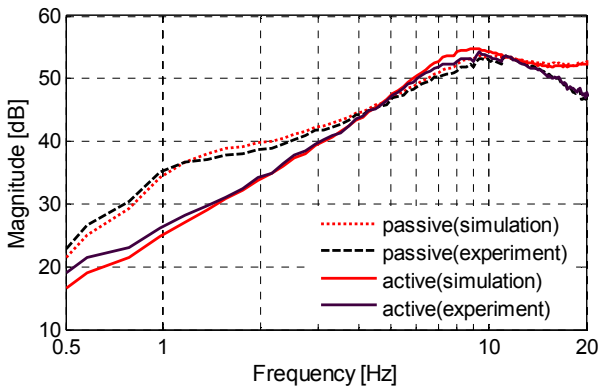

Fig. 10 Transfer characteristics of sprung mass acceleration.

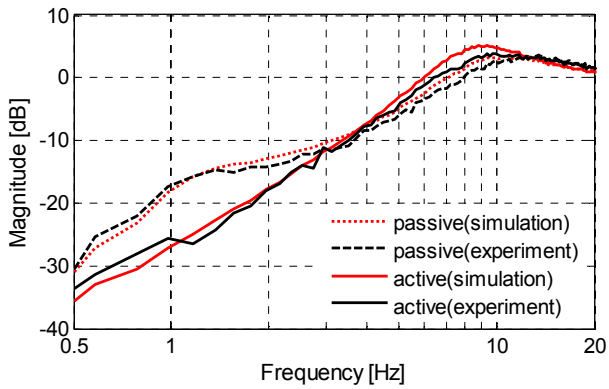

Fig. 11 Transfer characteristics of tire deflection.

4.3.3 Frequency Response Function of EMD Output

In the same way, the FRF of EMD output force, u, is calculated as shown in Fig. 12. The sprung and unsprung mass velocity feedback gains are represented in damping ratio expression as ζ_s = 1.5 and ζ_g = 0.45, respectively. While there is difference in value of amplitude between both results around the resonance frequency of unsprung mass, shapes of magnitude are similar. This reason seems to be derived from difference of frequency characteristics of PI controller, which controls current of motor circuit.

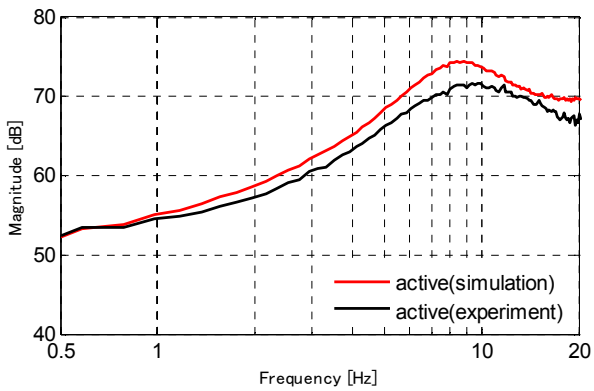

Fig. 12 Transfer characteristic of output force $\left|u/x_0\right|$.

4.3.4 Frequency Characteristics of Energy Balance

Energy balance of EMS system is examined for the frequency characteristics on the condition that vehicle travels at 80km/h on the rough road equivalent to C level of ISO standard. By Fourier transformation, the energy balance is calculated as cross spectrum of circuit current and voltage of power supply in the simulation. In the experiment, it is obtained using Eq. 19 from EMD output force, u, and stroke velocity.

Fig. 13 shows the spectra of energy balance of the simulation and experiment. The sprung and unsprung mass velocity feedback gains are ζ_s = 1.5 and ζ_g = 0.45, respectively, represented in damping ratio expression. Energy is consumed to isolate the vibration of sprung mass below about 2 Hz. There is a peak of consumed energy around the resonance frequency of sprung mass. Above about 2 Hz, energy is regenerated. In summary, energy is consumed around sprung mass vibration mode, and regenerated around unsprung mass vibration mode. On this feedback gain setting, a value of total power consumption is -15.3 W, that is, energy is totally regenerated in experiment. The experimental result is in good agreement with the simulation result, showing the validation of modeling of EMS in terms

of energy balance, as well.

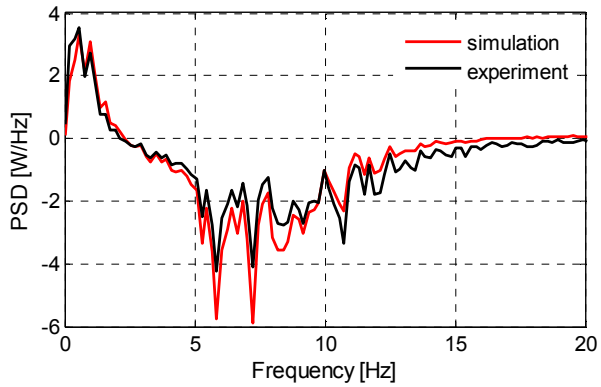

Fig. 13 Spectrum of energy balance.

5. Conclusions

Modeling of electromagnetic damper and suspension was developed as an electro-mechanical system. Using vibration tests for actual electromagnetic suspension, the validation of modeling and the capability of energy regeneration were demonstrated. The following obtained:

Summary and conclusions are

- The model of electromagnetic damper is developed for active control from the mechanical and electric viewpoints.
- The actual electromagnetic suspension system is developed and used for the active control.
- The agreement of both the frequency response properties and the energy balance between simulation and experiments are obtained.
- The vibration isolation and regeneration ability of electromagnetic suspension are demonstrated using the vibration tests.

For the future work, the authors have been developing the algorithm for energy-saving active control.

References

(1) Nakano, K., Suda, Y. and Nakadai, S.: Self-Powered Active Vibration Control Using Regenerated Vibration Energy, *Journal of Robotics and Mechatoronics*, Vol.11 No.4 (1999), pp.310-314.

(2) Nakano, K., Suda, Y., Nakadai, S., Tsunashima, H., and Washizu, T.: Self-powered active control applied to a truck cab suspension, *JSAE Review*, Vol.20 (1999), pp.511-516.

(3) Suda, Y., Suematsu, K., Nakano, K., and Shiiba, T.: Study on Electromagnetic Suspension for Automobiles –Simulation and Experiments of Performance, *Proceedings of the 5th International Symposium on Advanced Vehicle Control (AVEC'2000)*, (2000-8), pp. 699–704.

(4) Nakano, K., Suda, Y. and Nakadai, S.: Anti-Rolling System for Ships with Self-Powered Active Control, *JSME International Journal*, Series C, Vol.44, No.3 (2001), pp. 587-593.

(5) Suda, Y.: Proposal of Electromagnetic Damper for Automobiles –Possibility of Future

Automotive Suspension-, *Proceeding of the 4th Int. Symposium on Next Generation Vehicle Technology*, (2001-11), Gwangju, Korea, pp.1-7.

(6) Nakano, K., Suda, Y., and Nakadai, S.: Self-powered active vibration control using a single electric actuator, *Journal of Sound and Vibration*, 260 (2003), pp.213-235.

(7) Suda, Y., Shiiba, T., Hio, K., Kawamoto, Y. T. Kondo and H. Yamagata, Study on Electromagnetic Damper for Automobiles with Nonlinear Damping Force Characteristics (Road Test and Theoretical Analysis), *Proceeding of the 18th IAVSD Symposium*, *Vehicle System Dynamics Supplement 41* (2004), pp. 637-646